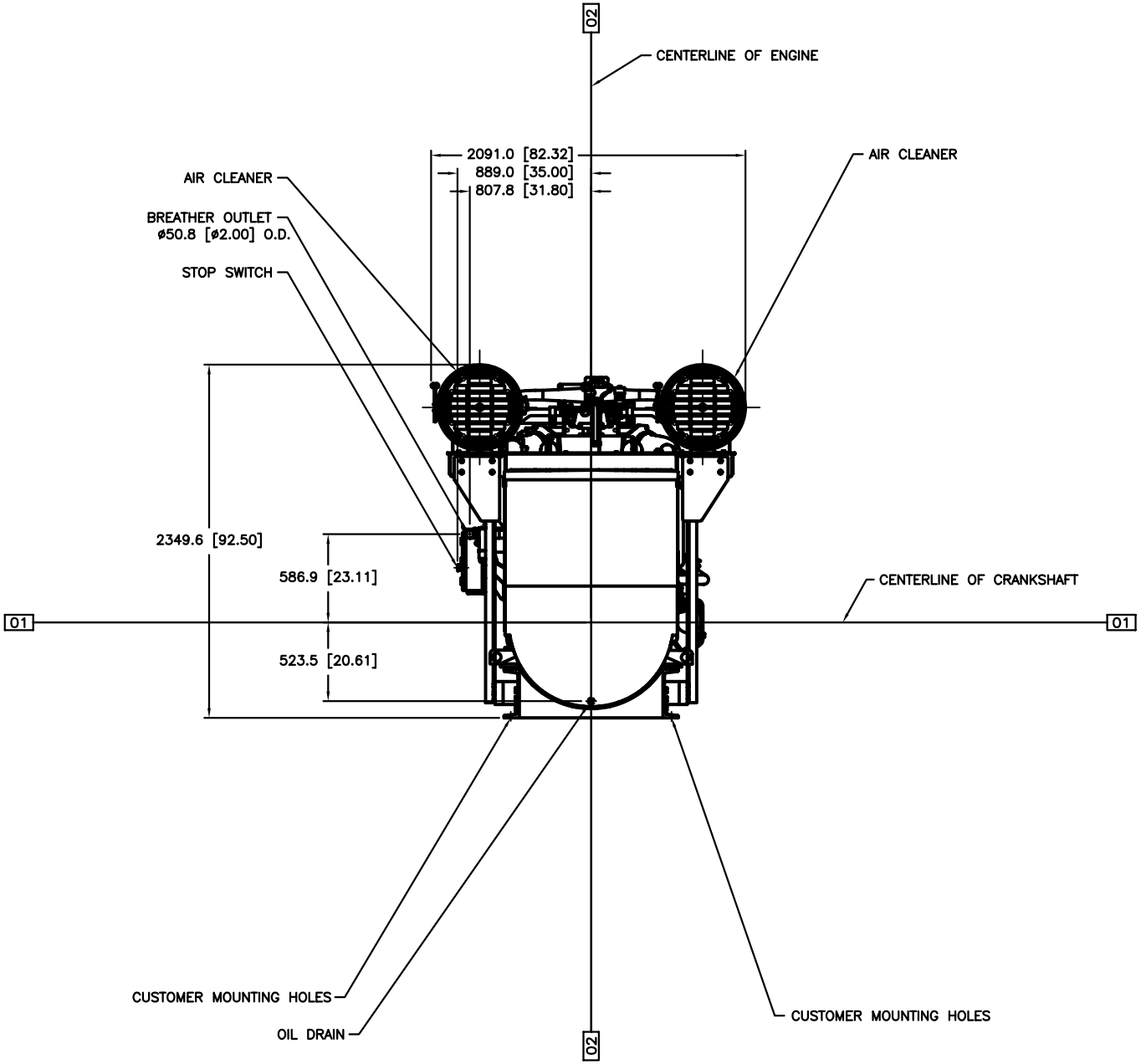

CAT G3516B PACKAGE GENERATOR SET
DWG# 212-9994 CHG 05
METRIC [INCH]
REAR VIEW
LE-2213 CHG 21 SHOWN

CATERPILLAR INC.
INSTALLATION ENGINE
GAS PACKAGE (GENSET)
212-9994